ARCTIKO

true cooling specialists

OPERATING INSTRUCTIONS

CRYO 170 / 230

Notice

■ Please read this user manual before using this product.

Be aware of the following warnings and cautions.
Ignoring the following warnings and cautions may cause damage to the equipment and/or user injury. Particular care must be taken not to disassemble the product.

Warning
Ignoring this warning may cause damage to the equipment and/or personal injury.

Caution
Special attention is required when using the equipment.

Read this User Manual before use the product and use it right. Place this book within easy reach of the freezer for reference purposes.

Contents

Before using the appliance 4
Warning 5
Name and function of each part. 7
Installation 9
Before commissioning 10
Operation panel (Double Cooling System) 13
Alarm function 15
How to change parameter in level s. et1, set2, set3, set7 16
Chart Recorder 19
Explanation of Optional Liquide Nitrogen Backup system (LN2) 23
Trouble shooting 26
Trouble Q&A 27
Maintenance 32
The following things do not indicate breakdown 33
Moving and Reinstalling the Freezer 34
Specifications ..... **Fejl! Bogmærke er ikke defineret.**
Electric Wiring Diagram 36
Test data 37
The advantage of the double cooling system 37
Notes 37

Before using the appliance

- The marks used in this product and this User Manual refer to the following: Cautionary messages with these marks aim to allow correct and safe use of the product and to prevent any risk and injury of you or other persons. Precautions are described under the categories, 'Warning' and 'Caution.' However, a crucial result might be caused by other matters depending on circumstances. Please be sure to keep all matters, since they contain important details about safety.

Meaning of marks		
Warning Caution	Caution: Electric shock 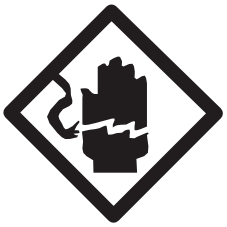	Caution: Explosion
Prohibition 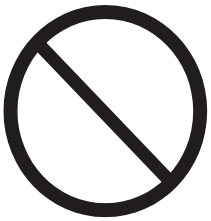	Do not touch	Do not disassemble
Strict observance	Pull out Power-plug 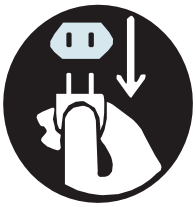	Grounding connection required

- Should the product be transferred to a new location or lent to a different user, please ensure the continuing safe and correct use of the appliance by placing this user manual where the next user can easily find it.

Warning

For correct use

- A qualified technician from the sales agency or elsewhere should only perform installation. Imperfect installation may result in electric shocks or fire.
- Install the appliance on a firm and level floor, which can hold the weight of the freezer. Imperfect installation or lack of floor strength may cause the appliance to tilt or fall over, leading to personal injury or damage to the freezer.
- Be sure to ground the appliance. Do not earth it to a gas pipe, water pipe, lightning rod, or phone cable. Imperfect grounding may cause electric shocks. (A class 3 grounding work by an electrician is necessary.)
- Use exclusive power outlet for the product. Do not cut and shorten the power cord by yourself. Do not use extension cords, or any kind of electrical outlet divider. Failure to follow these instructions may cause electric shocks, excessive heat-generation, or fire.
- Do not use the appliance outdoors. Using the appliance in a place where it can get in contact with water may cause electric leakage and electric shocks.
- Do not install the appliance in a damp place or any other place where it may get into contact with water. Failure to follow these instructions may ca use electric leakage and/or electric shocks, due to lower electrical isolation.
- Do not pour or spill water on the appliance or wash it with water. Failure to follow these instructions may cause short circuits and electric shocks.
- Do not touch the power plug, switches or any other electrical parts with wet hands. Failure to follow these instructions may cause electric shocks.
- Do not scratch, convert, bend, pull, or tie the power cord. Do not put any heavy objects on it. Make sure not to pinch the cord. Any damage to the power cord may cause fire or electric shocks.
- Make sure to clean the power plug regularly. Make sure of correctly connection of the plug into the socket. Dust or dirt on the power plug or incomplete insertion may cause electric shocks or fire.
- In case of activation of the circuit breaker, please consult your sales agency or other qualified technician. Forceful power restoration may cause electric shocks or fire.
- Do not hang on the door. The door may fall off the freezer or the freezer may fall over, leading to personal injury, or electric leakage and electric shocks.
- Do not place volatile substances or inflammables in the freezer. These substances may cause explosions or fire.

Warning

For correct use

- In case of malfunctioning, switch off the appliance, then pull out the power plug or turn the power off at the source. Failure to perform these actions when the appliance shows any signs of malfunction may cause electric shocks or fire.
- When moving the appliance, please consult your sales agency or other qualified experts. Imperfect installation may cause electric shocks or fire.
- When the appliance are not in use, it should be stored away from places where children are present. Ensure to lock the door lock. Failure to observe these instructions may lead to people being accidentally locked-in the appliance.

Use an exclusive power outlet separately. Do not use an electrical outlet divider, since this may cause excessive heat generation or fire.	Do not place any inflammables in the freezer, since they may cause explosions.	In case of gas leakage, do not touch the freezer. Turn off the gas valve and ventilate the area. Pulling out the power plug may cause an explosion due to static electricity
Keep the appliance away from water. Failure to do so may lead to electric leakage or electric shocks.	Do not use any inflammables near the appliance, since they may lead to fire.	Make sure the power cord is not being pressed on by any other objects, such as an appliance foot, since this may lead to electric leakage, or damage to the cord due to excessive heat generation.

Name and function of each part.

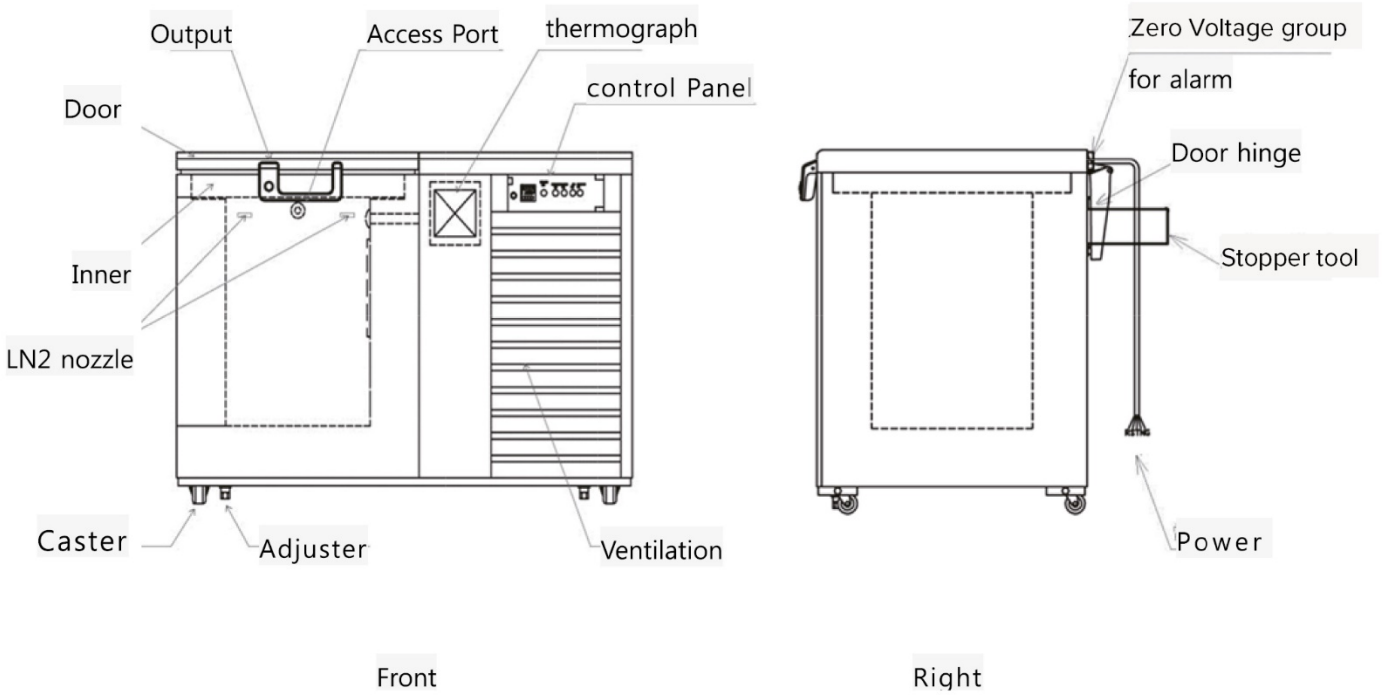

Door - Doorknob

- The doorknob is a pulling type, so pull the knob and then open the door. In addition, the knob has a cylinder padlock, the door can be locked.

Sub-lids

- Ensure to install the Sub-lids before operation in order to decrease leaked chilly air or maintain insulation.

Control panel

- Do various controls such as power ON/OFF, temperature display, temperature adjustments, alarm control etc.

Thermograph

- Records the inner temperature of the freezer.
  Inner sensor of the freezer: Pt1000 ohm.

Ventilation gallery

- Radiating is in the condenser of the machine room. As it radiates by absorbing the air with an air-cooling fan, do not block the front of the ventilation gallery and the rear of a main body with a wall etc.

External output for alarm

- A 3-pole connection is on the rear of the main body. From this connector, you can connect a remote alarm system. The output is a Voltage free connection.

Access port

- There is a porthole at the center of the backside of the freezer, where you can insert temperature sensors for measurements etc.
  The inside diameter is ø20 mm, and the exterior opening is sealed with a rubber plug.

Stopper tool

- To secure minimum space and necessary ventilation for the Compressor room. Install this tool on the backside of the units, to keep distance to the wall (approx. 25 cm).

Feed adjuster

- To adjust the Feed, turn left to extend and turn right to contract. The width of adjustment is approx. 15 mm. Upon installation, adjust the feed for correct level and balance of the unit.

Installation

A qualified technician from the sales agency or elsewhere should only perform installation. Imperfect installation may result in water leakage, electrical leakage, electric shocks, or fire.

Choose an area with low levels of heat and moisture.

- The cooling performance of the freezer will be affected, if it is placed in direct sunlight or near a source of high temperatures. Maximum Room Temp.is +30°C.
- If moisture or water is getting in contact to the freezer, it may be a cause of poor electrical isolation or rust.

Allow adequate space around the freezer

- Lack of space may cause poor cooling performance, breakdown of the freezer, or overuse of electricity.
- Allow at least 15 cm from the back wall of the freezer, and at least 10 cm from the sidewalls. There should be a space of at least 50 cm between the top of the Freezer and the ceiling.

Install the freezer on a firm and level floor

- To stabilize the freezer, turn the adjustable feet (front side only) clockwise until they make firm contact with the floor.
- If the freezer is not stabilized correctly, it may cause unusual noises and vibrations.

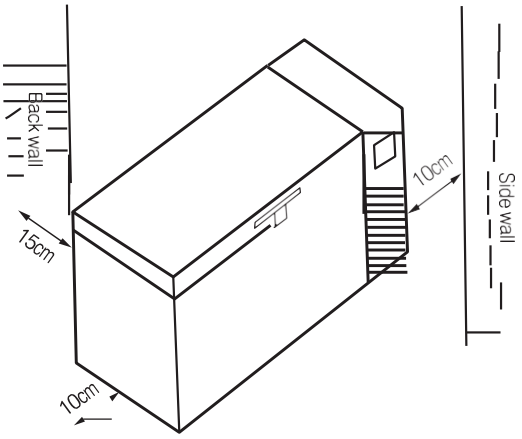

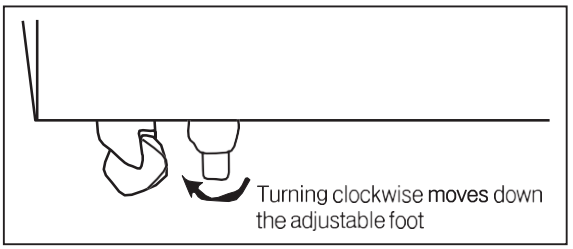

Ground the freezer to prevent electric shocks

- The power plug used for this appliance comes with a ground. Make sure to use an earthed power outlet. Imperfect grounding may lead to electric shocks.
- If there is no existing earthed power outlet, it will be necessary to have one installed by a qualified electrician.

Do not connect the grounding conductor to the following objects.

- Water or gas pipes (This may cause explosions or fire.)
- Lightning rods or phone cables (This may cause serious injury or death if lightning strikes.)

Electric Leakage Breaker

- If installation in a damp area is unavoidable, the use of an electric leakage breaker is strongly required.

Before commissioning

1. Install the freezer on a flat and level floor.
   The front side of the freezer should be approximately 1cm higher than the backside.

2. Clean the inside of the freezer and install the sub-lids.

3. Connect the freezer to the exclusive power outlet.
   Do not use extension cords.
   Do not use any electric outlet divider.

4. Before loading samples into the freezer, make sure the inside temperature has reached the Set point.
   The plastic odor will disappear once the freezer cools down.

Do not turn on the power for 30 minutes after moving, which may cause breakdown.

Warning

Do not put bagged ice packs (including those containing ammonium nitrate and urea) in the freezer. Leakages from such bags may cause rust or breakdown of the freezer.

Do not place any form of volatile substance or inflammable, such as ether, benzene, alcohol, propane gas and glue, etc. inside the Freezer. Failure to follow these instructions may lead to explosions or fire.

Any type of bottles or cans containing liquid fluids with hermetic sealed lids, can break course to higher pressure, should never be stored in the freezer since the bottles and cans may explode. This could lead to personal injury.

Do not touch stored materials, containers (especially metallic ones), or the inside of the freezer with bare or wet hands. Failure to follow these instructions may lead to frostbite. Make sure to wear gloves when working.

Make sure to read the following!

Warning

If the surrounding temperature is outside the optimum range (5°C~30°C), it may cause breakdown.

Do not use any inflammable spray, such as lacquer paint, or any form of volatile substances or inflammables near the freezer. Sparks discharged from the electrical components of the freezer may ignite such substances that lead to explosions or fire.

Do not pour or spill water directly onto the appliance or wash it with water Failure to follow the instructions may lead to short circuits or electric shocks.

Do not touch the electrical components of the freezer, such as the power plug and the switches, with wet hands. Failure to follow these instructions may lead to electric shocks.

Do not scratch, convert, bend, pull, or tie the power cord. Also, do not put any heavy objects on it. Make sure the cord is not being pinched. Any damage to the power cord may cause fire or electric shocks.

When unplugging the freezer, pull on the plug itself. Do not pull the power cord. You may damage the inside wires leading to overheating and fire.

Use the switch to turn the freezer on or off. Inserting or unplugging the plug while the freezer is switched on, may cause electric shocks or short circuits.

After switching off the appliance, wait for at least 10 minutes before switching it on again. Failure to do so may overload the compressors, causing a breakdown. However, please note that the appliance should be switched on within 1 hour after the power is cut. If you switch off the appliance for more than 1 hour, please wait for at least 48 hours with the door open before restarting it.

Make sure that the power plug is cleaned regularly. Always make sure that the plug is completely inserted into the outlet. A dusty or dirty plug or incomplete insertion of the plug may cause electric shocks or fire.

Please carry out regular checks to ensure that the circuit breaker is functioning correctly. If it is defective, it may lead to electric shocks in the case of electrical leakage.

When a circuit breaker activates, please consult your sales agency or qualified experts Forceful power restoration may cause electric shocks or fire.

Do not place any objects or containers containing water in the freezer. If they fall over, they may cause personal injury and the spilt water may lead to poor electrical isolation and electric leakage.

Do not put your hands in the mechanical compartment as it contains high-speed fans and heat-generating parts. Failure to follow these instructions may lead to personal injury.

Do not hang on the door. The door may come off the freezer or the freezer may fall over, leading to personal injury, electric leakage, or electric shocks.

Do not climb on the freezer. It may fall over and cause personal injury.

Do not insert fingers or other objects into the air vents or air intakes. As the fan is spinning at a high speed, it may cause personal injury or breakdown.

If you do not use the freezer for a long time, for safety purposes, please unplug the appliance at the outlet. Failure to follow these instructions may lead to dust collecting on the power plug resulting in fire.

Do not use the appliance on-board vehicles or any other type of vessel.

Operation panel (Double Cooling System)

Operation Panel

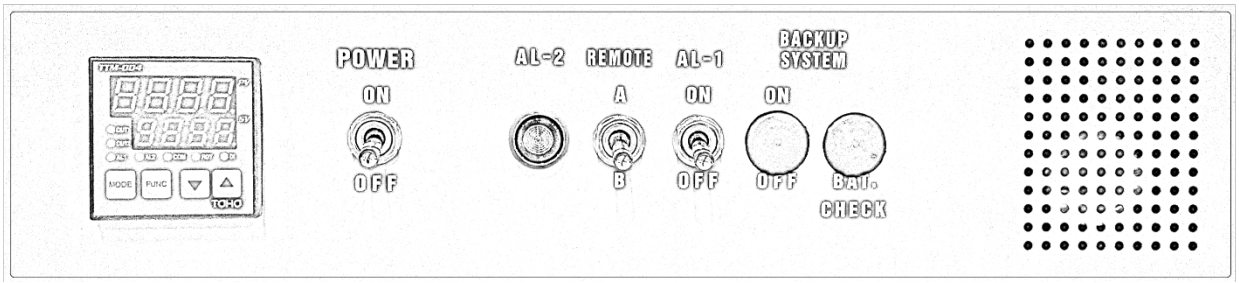

Temperature Controller

■ You can control the temperature by setting parameters.

1. When switching on the freezer, the initial screen will be displayed for 4 seconds.
2. The controller shows the present value (PV) and set value (SV)
   Changing the set value by pressing ▼, ▲ Key to set the temperature.

Names & Functions in Display

PV	Present value, actual temperature
SV	Set point value, desired temperature in the unit
OUT 1,2	Indicator light is on when Outputs 1 or 2 are on.
AL 1,2	Indicator light is on when event outputs 1 or 2 are on.
COM	Not available
RDY	Flickering when it is getting ready
DI	Indicator light on when DI is on
MODE Key	Used to shift screen
FUNC Key	Used to run the set function
▼▲ Key	Used to increase/decrease (change) the set value

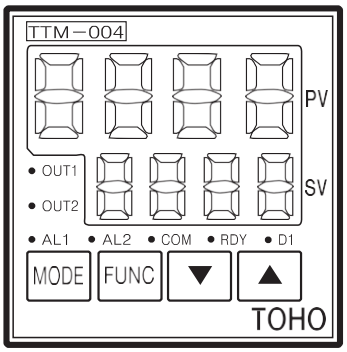

The range of temperature of use is -140°C ~ -150°C.
Use in a condition other than this range may cause breakdown.

Do not operate this for a purpose other than temperature control, since it may cause a breakdown.

Follow the order below when starting the operation

1. Insert main power plug in the wall socket.
2. Turn off AL-1 switch and REMOTE switch.
3. Turn on POWER switch. The Controller will be switch on, and showing actually temperature and set point temperature, and the Compressor will start operation.
4. Set the temperature for use within the range of the designated applicable temperature.
5. When desired Set point (Temperature) has been reached, load the samples into the freezer. For reference, start loading the samples in small amounts in steps.
6. To enable the alarm functions when the freezer has reached stable running temperature, turn on AL-1 switch and REMOTE.

Follow the order below when stopping the operation.

1. Turn off AL-1 switch and REMOTE switch.
2. Turn off the POWER switch. The controller will then stop the operation of the unit
3. Pull out the Power plug from the wall socket.

Ensure to restart after min. 10 minutes after stopping the operation.
Restart right away causes the breakdown of the freezer.

Storage of samples in the freezer.

This unit is for storage of samples. When loading samples into the freezer, the samples must be precooled. If a user load plenty of the samples, which have Room temperature into the freezer, the temperature will go up temporarily and an alarm may go off. When storing the samples of Room temperature in a freezer, load small amount of samples several times to prevent overheating and high temperature alarm. When a user load plenty of cold storage packs or cold insulation material into a freezer, the same state will occur. Cold storage packs or cold insulation material has the merit of keeping the low temperature environment for a long time, but requires considerable amount of time in cooling, so if a user load big amount of warm samples in the freezer, such will cause a lot of heat to the unit.

Battery change

- The battery for Power failure alarm is consumable. The life is 3 years after installation. When the battery is out, an alarm buzzer will not sound even upon power failure, which may affect the samples adversely. We recommend that a user should check the battery regularly and exchange in advance. Purchase of the Battery can be done locally.

How to check the buzzer.

A buzzer will sound when POWER switch is off while AL-1 switch is ON.

Alarm function

This unit alarms with a buzzer, will sound, when the inner temperature of a freezer increases or power goes out, in order to protect stored items. Furthermore, it has the Voltage free terminal to remote alarm system. All is equipped with On/Off switches, so use it as necessary.

Temperature increase alarm

The temperature increase alarm sounds under the following conditions.

- AL-1 switch is ON
- The inner temperature of a freezer (PV) is +15°C compared with the set point temperature (SV)

■ In case of the first use, the alarm will sound, caused to the inner temperature of a freezer is too high. After reaching stable temperature, turn on the AL-1 switch.

Power failure alarm

The Power failure alarm sounds under the following conditions.

- AL-1 switch is ON
- Occurrence of Power failure or equivalent incident (plug is pulled out of the wall socket or the power switch is off)

■ An alarm buzzer sounds for about 48 hrs. continuously even when an electric current is not applied. Limited to the case of sufficient charging (after operation for min. 5 days). The life of a battery is approx. 3 years.

Alarm signal to remote alarm system

The remote alarm signal output will be activated under the following conditions.

- REMOTE switch is ON (output even when AL-1 switch is OFF)
- The Alarm delay is the same as the high temperature alarm and power failure.

■ The remote alarm connector of the external alarm is Off (open) when no Alarm is present, when there is an Alarm activated, the contact will be closed.

Abnormally alarm of double cooling system

Where there is an electrical anomaly in the double cooling system. Breakdown of the Compressor, AL-2 lamp (red) turns on. In addition, where AL-1 switch is ON, a buzzer sounds interworking with AL-2 lamp.

■ When only one cooling system is running, the Temperature in the Freezer can be kept under -130°C.

Fan motor anomaly

The abnormal fan motor runs under the following condition.
In case of the insufficient rotation or stop of a fan motor, an alarm buzzer will sound and AL-2 lamp (red) will be on.

Start of LN2 backup. (Optional equipment)

Where the inner temperature of a freezer goes above -130° C and the LN2 BACKUP SYSTEM switch is ON, an alarm buzzer will sound and simultaneously LN2 are sprayed into the freezer.

How to change parameter in level s. et1, set2, set3, set7

1. Press the MODE for 2 sec.
2. Select the desired SET level by pressing the button UP or DOWN
3. Access to the SET level by pressing the MODE button.
4. Scroll between the parameter in the SET level by pressing the MODE button.
5. To change the parameters press the button up or down.
6. Accept the changed parameter by pressing the MODE button.
7. To return to the main menu press the button for 2 sec.

SET 1

Code	Name	Description		Arctiko Default Settings
_InP	Setting for input types	**	Input type	**10**
		00	K Thermocouple	
		01	J Thermocouple	
		02	R Thermocouple	
		03	T Thermocouple	
		04	N Thermocouple	
		05	S Thermocouple	
		06	B Thermocouple	
		10	Pt 100	
		11	JPT 100	
_PdF	Setting for filter input	Setting range : 0 ~ 99 sec.		**1**
_dP	Setting for decimal position	0	none	**0**
		0.0	on decimal position	
_FU	Setting function by FUNC Key	0	none	**0**
		1	Change of digit	
		2	RUN/READY	
		3	AT	
		4	Timer start/Reset	
_LoC	Lock setting	0	OFF	**3**
		1	All lock	
		2	Lock of operation mode only	
		3	Lock except operation mode	

SET 2

Code	Name	Description	Arctiko Default Settings
_SLH	Setting for SV high limiter	Setting range : Low to high limit (Keep 50 digits between high limit of SV limiter and high limit of SV limiter) Setting unit : °C	**-50**
_SLL	Setting for SV low limiter	Setting range : Low to high limit (Keep 50 digits between high limit of SV limiter and low limit of SV limiter) Setting unit : °C	**-180**
_nd	Control mode	Setting for control mode **rUn** : Control action **rdy** : Control stop (Manipulated variable low limiter output) **nAn** : Manual control	**rUn**
_Cnt	Setting of control type	Function * Type 0 Type A 1 Type B (Overshoot protection) Control type of Output 1 * Type 1 PID control 2 ON/OFF control Control type of Output 2 * Type 0 None 1 PID 2 ON/OFF 3 EV output	**020**
_dI r	Setting for change of normal or reverse	0 Reverse 1 Normal	**1**
_nu I	Manipulated value for output 1	Setting for manipulated value monitor output 1 and manipulated value on manual control. Display range : 0. 0 ~ 100 0% Setting range : low to high limiter manipulated value.	**100.0**
_C I	Output 1 , control sensitivity	Setting range : 0 to 999 or 0. 0 to 999. 9 Setting unit : °C	**1**
_CP I	Output 1, OFF position	Setting range : -100 to 999 or -1999 to 999. 9 Setting unit : °C	**0**

SET 3

Code	Name	Description	Arctiko Default Settings
_E IF	EV setting/function (PV & Additional event)	PV EV function 2 Type 0 None 1 Deviation high and low limit 2 Deviation high limit 3 Deviation low limit 4 Deviation high and low limit range 5 High and low limit 6 High limit 7 Low limit 8 High and low limit range Additional EV function 1 Type 0 None 1 EV Output hold 2 Stand-by sequence 3 EV output hold & stand by sequence	**2**
_E IH	High limit setting	Range : -199. 9 to 999. 9 Unit : °C -1999 ~ 9999	**15**
_E IC	Setting of EV output sensitivity	Range : 0. 0 to 999. 9 , 0 to 9999 Unit : °C	**0**
_E It	Delay timer setting	Range : 0 to 9999 sec.	**0**
_E Ib	Abnormal SV/heater function setting	2 Type 0 None 1 PV EV output normal 2 Heater abnormal 3 PV EV output abnormal & heater abnormal Additional EV function 1 Type 0 None 1 EV output hold	**00**
_E IP	Polarity setting of EV output	1 Type 0 Normal Open (NO) 1 Normal Close (NC)	**1**

SET 7

Code	Name	Description	Arctiko Default Settings
_tno	Timer output setting	Output type 0 Non-use timer function 1 Control 2 EV output 1	**0**

Chart Recorder

Wall Mounting Two recessed holes are provided for wall mounting screws.

Panel Mounting Two Panel Mounting sprung screw clips are provided to mount the mini-chart in a 138mm square cut out. See below

Door Lock A quarter turn security lock and two keys are provided. See below.

Battery / Mains Powered Battery recorders have two factory fitted 3.6-volt lithium AA cells, which provide a minimum of eighteen months operation. There is a low battery audible alarm.

Mains powered recorders have a 2-core lead that can be connected to a 110Vac to 240Vac Supply. They also have a factory fitted re-chargeable battery that provides a minimum of three months operation in the event of a power failure.

Changing the Chart

The chart is removed by first lifting the pen arm then using your thumb and fore fingers push the retaining toggle to the open position (diagram 1). Lift the toggle upright position (diagram2), Remove and replace the chart taking care to ensure the chart goes behind the two chart guides. Rotate the chart anti-clockwise until the pen nib is approximately 10mm to the left of the start point. Lock the chart by pushing the toggle back to the center position (diagram 3) Lower the arm so that the pen nearly touches the chart and use the chart advance button to align the pen with the start position. Then release the pen arm.

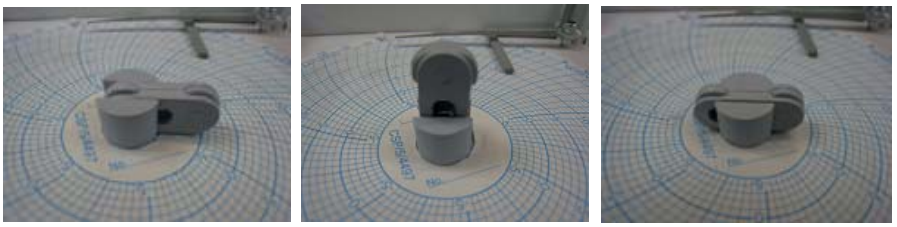

Changing the pen

Gently lift the pen arm then pull the pen nib off in the direction of the arm taking care not to twist the arm on its spindle. Replace with a new pen.

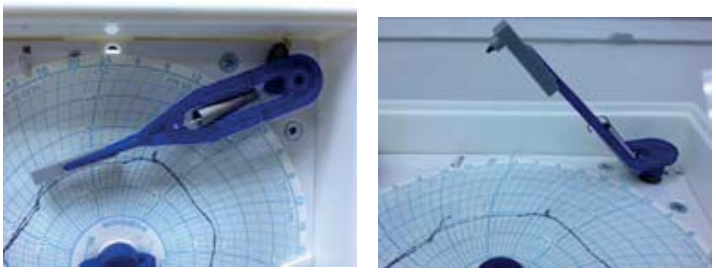

1.1 Pen Alignment

It is recommended that this procedure is carried out whenever the pen nib is changed or at any time if it is suspected that the pen arm has been forced out of position by rough handling.

1. Start with Rotation Switch set to 1 (see diagram overleaf)
2. Set S1 ON
3. Set Rotation to 0
   (Sounds "dah dit dah dit" C for align)
4. Press HI until the pen is at the outer edge of chart (HI &LO to fine adjust)
5. Press ACCEPT
   (Sounds "dit dah" A for Accept)
6. Press LO until the pen is at the inner edge of chart (HI &LO to fine adjust)
7. Press ACCEPT
   (Sounds "dit" E for END of alignment)
   (Pen will now return to indicate temperature)
8. Return Rotation Switch to the required chart speed
9. Set S1 OFF

Note all modes timeout after 30 seconds of inactivity, if the setting mode is lost then return Rotation SW to 1 then 0 to restart the setting procedure

2.1 Setting the Alarms (If fitted)

Note: The alarm function is NOT fitted on the -100 / -170°C version!
If HI is pressed first then the HIGH alarm will be adjusted.
If LO is pressed first then the LOW alarm will be adjusted.

1. Start with Rotation Switch set to 1 (see diagram overleaf)
2. Set S1 OFF
3. Set Rotation to 0
   (Sounds "dit dit dit " S for SET alarms)
4. Press HI
   (If alarm is already set the pen will move to indicate previous value)
   (Sounds "dit dit dit dit" H for HIGH alarm)
   (Pressing Accept will keep the old setting)
5. Press HI/LO until the pen is at the desired HI alarm value
6. Press ACCEPT
   (Sounds "dit dit dit" O for OK)
   (Pen will now return to indicate temperature)
7. Press LO
   (If alarm is already set the pen will move to indicate previous value)
   (Sounds "dit dah dit dit" L for LOW alarm)
   (Pressing Accept now will keep old setting)
8. Then press HI/LO until the pen is at the desired LOW alarm value
9. Press ACCEPT
   (Sounds "dit dit dit" O for OK)
   (Pen will now return to indicate temperature)
10. Return Rotation Switch to the required chart speed

3.1 Setting a Pen Offset (if required)

1. Start with Rotation set to 1
2. Set S1 ON
3. Set Rotation to 9
   (Sounds "dit dah dah dit" P for pen offset)
4. Press HI or LO until pen indicates desired value on the chart.
5. Press ACCEPT, sounds "dit dah" A for Accept
6. Return ROTATION to the required chart speed
   (Pen will now move to indicate temperature with the pen offset)
7. Set S1 OFF

4.1 Remove the Pen Offset

1. Start with Rotation set to 1
2. Set S1 ON
3. Set Rotation to 9
   (Sounds "dit dah dah dit" P for pen offset)
4. Press Accept and the offset will be zeroed
5. Return ROTATION to the required chart speed
   (Pen will now return to indicate temperature with no offset)
6. *Set S1 OFF*

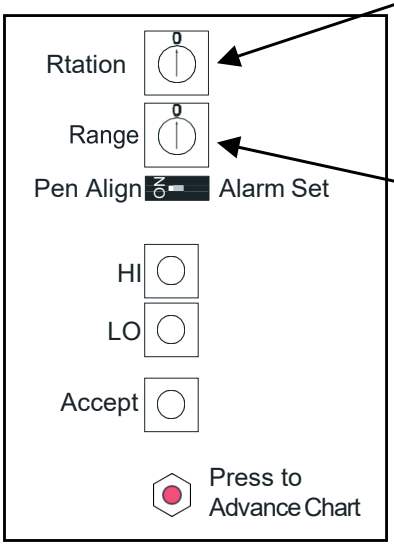

Chart ROTATION Switch

1= 12 Hour
2 = 1 Day
3 = 7 Day
4 = 31 Day
8 = Transport / Sleep Mode
9 = Pen Offset
0 = Pen Alignment

Temperature RANGE Switch

1 = -35°C to +15°C
2 = -25°C to +25°C
3 = -10°C to +20°C
4 = - 5°C to +25°C
5 = 0°C to -50°C
6 = -50°C to -100°C
7 = 0°C to +50°C
8 = +50°C to +100°C
9 = 0 to 5Vdc
0 = -100°c to -170°c
(*In 5 Volt mode use Sensor L and Gnd as the input*)

START UP PROCEDURE:
The chart recorder is delivered in “Transport / Sleep mode”. To activate the chart recorder, please turn the “Rotation” button to position 3 (for 7 days operation).

Functions:

Accept / Alarm set Button - When in alarm pressing the **Accept** / **Alarm set** button will cancel the Alarm Sounder but the Alarm Relay will remain in its alarm condition until the temperature returns to normal. To accept an alarm press and hold the **Accept** / **Alarm set** button until the sounder stops.

Paper Advance - If there, is no alarm sounding, pressing and holding the **Accept** / **Alarm set** button will advance the Chart. If there is an alarm, you must cancel it first by pressing and releasing the **Accept** / **Alarm set** button, then pressing and holding it will advance the Chart.

Arm Displacement - The pen arm mechanism is protected against rough handling by a clutch mechanism. If it is suspected that, rough handling or inappropriate use has moved the pen arm then the pen alignment procedure 1.0 should be carried out.

Dismantling will invalidate the warranty

Explanation of Optional Liquide Nitrogen Backup system (LN2)

The product of -150°C has an automatic cooling auxiliary device as optional.
As to an automatic cooling auxiliary device, the inner temperature of a freezer rises, a magnetic valve connected to LN2 cylinder opens when the temperature reaches -130°C, an alarm buzzer goes off and at the same time LN2 sprays from two nozzles into the freezer.
The inner temperature of a freezer while LN2 sprays intermittently
keeps around -125°C~- 135°C.

1. Installation of LN2 cylinder and hose connection

- A pressurized nitrogen cylinder is used for a LN2 cylinder
- Turn off AL-1 switch, REMOTE switch, and BACKUP SYSTEM switch on a control panel.
- Connect the sow block (small sow block) on the end of an automatic cooling auxiliary device hose (3M) to a magnetic valve (SV5) and clap up firmly with a spanner not to have a leakage. Then, connect the large sow block on the end of a hose to a cylinder; clap up firmly with a spanner not to have a leakage.
- If a user, opens a liquid purge valve of a cylinder, LN2 fills up to a magnetic valve (SV5) via the hose of an automatic cooling auxiliary device.

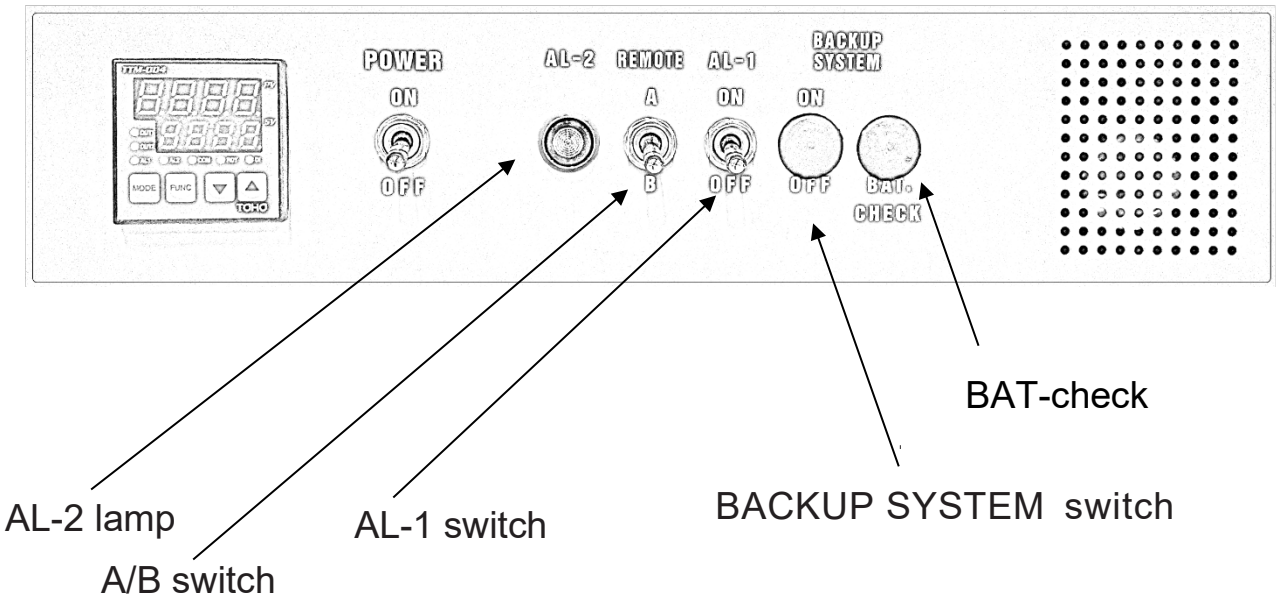

The A/B switch changes the default state of the alarm relay output: If the switch is set to A the relay outputs matches the NO and NC labels on the relay connections.
If the switch is set to B, NO becomes NC and NC becomes NO.

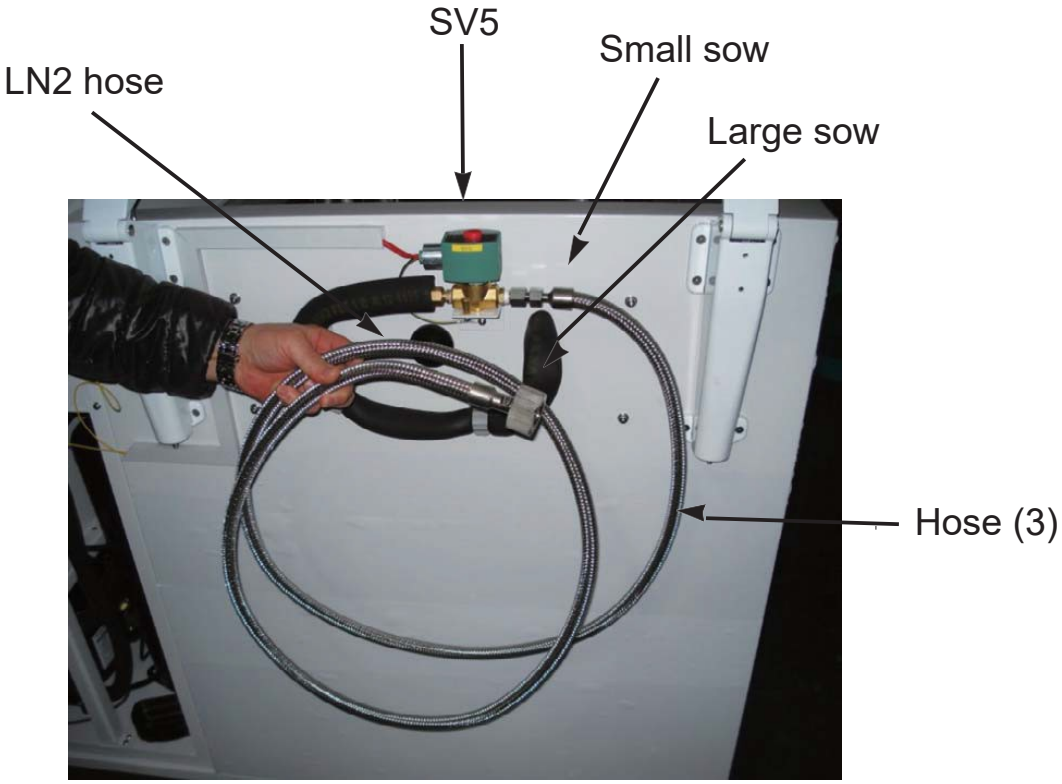

The temperature under which an automatic cooling auxiliary device operates is set as -130°C. When the inner temperature of a freezer reaches above a setting temperature, a magnetic valve opens and LN2 sprays into a freezer.

For installation of the LN2 cylinder, ask an LN2 technician, coursed to the high pressure.
If there is garbage or metal powder in a connecting hose or connecting metal, a magnetic valve can be clogged and LN2 is leaked or a magnetic valve becomes defective. Ask a high-pressure gas expert to be extra careful of garbage or metal powder for installation.

2. Operation check

- When the connection to a cylinder is done, start operation and cool the inner temperature of a freezer down below -130℃.
- If the inner temperature of a freezer reaches below -130℃, turn on AL-1 switch and BACKUP SYSTEM switch.
- To check LN2 spray, turn on BACKUP SYSTEM switch and check if LN2 sprays only while BAT CHECK button is pressed.
- If a user opens a door upon LN2 spray, the injection stops temporarily as per the operation of the door switch, which are located on the rear side of the unit. When the door is closed again, the injection of LN2 will start again.

Ensure to use a cylinder stand for cylinder installation, or use after fixing a cylinder firmly. Otherwise, a user may be injured by a fall or an unexpected accident may occur, because of cut connecting hose and scattered LN2.

The power of an automatic cooling auxiliary device uses a chargeable battery (lead storage battery). The life of a battery is approx. 3 years. Inquire of a store where a user bought it for replacement.

Install it where sufficient ventilation is possible. Ensure to ventilate since there is a risk of hypoxia or gas poisoning due to N2 gas discharge while an automatic cooling auxiliary device is running.
In addition, even when an auxiliary cooling device is not running, N2 evaporation gas is generated. Always ventilate the installation place.

3. Common use of alarm buzzer, alarm lamp

The alarm buzzer and the alarm lamp of the product with an automatic cooling auxiliary device use the alarm in common as 5-type alarm system.
[Alarm boozer going off, where a lamp is on]

① Inner temperature anomalies of a freezer (setting temperature above +15°C) The inner temperature of a freezer rises while running by +15°C or above than the setting temperature.
Ex.: Where the set inner temperature of a freezer is -150°C, an alarm boozer goes off at -135°C (alarm boozer 1)

② Freezer overload
Where the thermal relay of an electron switch for a freezer runs and a freezer does not start, AL-2 lamp (red) is on.

③ Fan motor anomalies
Where a fan motor lacks rotation or stops,
alarm boozer 1 goes off and AL-2 lamp (red) is on.

④ The Automatic cooling auxiliary device runs (anomalies of freezer inner temperature above -130°C)

If the inner temperature of a freezer is above -130°C while BACKUP SYSTEM switch is on, an alarm boozer goes off (where LN2 cylinder is correctly connected, LN2 sprays into a freezer).

⑤ Power failure alarm
Alarm buzzer goes off where the power is down while AL-1 switch is on.

If an alarm buzzer or an alarm lamp goes off, check what kind of the alarm this are, and require a technician from a service center immediately.

Trouble shooting

Under no circumstances should the appliance be disassembled, repaired, or converted by unqualified people. Failure to follow these instructions may cause personal injury and/or loss of property due to malfunctions, electric shocks or fire.

Should the appliance malfunction, stop the operation, and then pull out the power plug or turn off the power supply at source. Continuing to operate the appliance when it shows signs of malfunctioning may cause electric shocks or fire.

Check the following:

1. When the appliance does not cool down at all:
   Is the power plug fully inserted into the wall socket?
   Is the fuse or circuit breaker disconnected? Has there been a power cut?
   Is the power switch turned off?

2. When the appliance shows poor cooling performance:
   Does the set temperature correspond to the desired temperature?
   Is the appliance placed out of direct sunlight? Is the appliance placed away from any source of high temperatures?
   Is there enough space around the appliance for good ventilation?
   Have any materials, which were at room temperature, just been loaded inside the freezer?
   Has the door been opened and closed frequently?
   Is the appliance too full loaded?

3. When the appliance generates unusual noise:
   Is the appliance installed on a firm and level floor?
   Is the appliance leveled properly?
   Is there sufficient space between the back and sides of the freezer and the adjacent walls?

Check the above. If the problem remains, contact your sales agency.

- Model Name: See the sticker on the right.
- Serial Number: See the sticker on the right
- Breakdown symptoms: Describe in as much detail as possible

Trouble Q&A

Question	Answer
1. A freezer doesn't cool at all (Temperature display is not on)	Check the power source as : - 1) Is the power plug pulled out? 2) Is the breaker switch off? 3) Is power out? 4) Is the power on/off switch of a main body off?
(Temperature display is on)	Check inside of a Compressor room immediately since there's a possibility of Compressor anomalies
2. The freezer cools but not enough. (The temperature doesn't come down to a set temperature)	1) Check the Room temperature. Maximum allowed RT+30°C. This unit is designed to perform the fixed cooling capacity under +30°C of the ambient temperature. Recommended Room temperature is +20~25°C and if the ambient temperature is more than +30°C such as in summer, cooling capacity declines. Maintain a proper ambient temperature. 2) Is the product installed close to a wall? Recommended space from side 10 cm both sides and 25 cm at the rear side and 120 cm to the ceiling. Faulty fan motor leads to faulty cooling. (Refer to Q5-2) 3) Contaminated radiator with dust or clogged gallery cause faulty cooling. Clean the radiator gallery.

	5) Did you load too many samples of room temperature in the freezer? In this case, the inner temperature of a freezer rises temporarily and a temperature alarm may not go off depending upon the storage volume. In that case, check the temperature change with 1-2 hours' time interval. In case of storing a lot of samples which doesn't simply coagulate even under the freezing point (0°C.) such as cold storage packs, there are cases that it won't freeze down even after running more than 24 hours. It is because of the load is greater than the cooling capacity of the unit. Such use can cause a breakdown.
3. Covered with frost.	It is normally when there are frequent door open/close and high humidity. If frost is too much and serious, check as follows. 1) Check if there is a gap between door gasket and main body-frame, with a door closed. If yes, frost forms by air with moisture getting into the freezer. If this frost is left as it is, it will increase more and closing a door gets worse, which will then cause frost again. In this case, turn off the power first, Defrost the unit completely and wipe moisture with dry towel thoroughly. Also, in case of removing frost while the power is on, use the frost removal spatula etc. Do not remove frost with a sharp tool. If using a sharp tool, the evaporator or the refrigerant pipe can get damaged, which may lead to gas leakage. 2) Check if there is any external probe going into the freezer chamber, between the frame and the door gasket. Use the rubber porthole.

4. A door doesn't open	Sometimes a door does not open when a user tries to open again right after closing it. Coursed to warm air getting in to the unit when the door is open, the hot air will make vacuum in the chamber temporarily. Wait a minutes, then the vacuum has equalized, at it is able to open the door again.
5. Strange sound comes out of a Compressor room	1) Check if there is any foreign substance inside the compressor room There are cases when noise comes out because of a foreign substance stuck in radiating fan motor such as paper, vinyl, etc. In that case, ensure to turn off the power and remove the foreign substance. 2) In case of scratchy sound, vibrating sound, check inside the compressor room, confirm the cause and actions accordingly.
6. There is a difference between the displayed temperature in the controller and an external probe.	As this unit adopts natural convection type, the temperature inside of a freezer differs depending upon a point where a temperature is measured. Even at the same point, temperature changes constantly. That is the difference of sensor type, sampling cycle, etc.
7. Does it start automatically after power failure?	This product automatically start after a power failure, if the switch remains as in operation. No special control with a controller, etc. is required.
8. Where the main body display temperature shows「----」	The main body temperature sensor inside a freezer has a short circuit. In that case, the main body display temperature shows「----」because of consecutive operation. Replace the sensor.

9. Main body display temperature is lower than set temperature (excessive cooling)	Faulty controller. Replace it.
10. Chart of a thermograph is not transferred. No record on a chart.	Refer to the user manual of a manufacturer
11. An automatic cooling auxiliary device (LN2) does not operate even when the main body display temperature rises.	1) Check if [AL-1] and [BACKUP SYSTEM] on the control panel are ON. As the automatic cooling auxiliary device works with an alarm device, it does not work if [AL-1] is off. 2) Check if a main body door is open. If a main body door is open the door contact will prevent the LN2 to spray into the unit.
12. An alarm buzzer sounds and an alarm lamp is turned on	1) Increase of the inner temperature of a freezer 2) Fan motor anomaly backup The anomaly of a radiating fan motor will be remedied under the following conditions. In case of the insufficient rotation or stop of a fan motor during operation, an alarm buzzer sounds and AL-2 lamp (control panel) is on. Cooling is maintained as an auxiliary fan runs and the alarm buzzer sounds at the same time, but the alarm buzzer will continue sounding (alarm hold circuit). In case of stopping the buzzer, turn off the power switch. Continue operation by turning on the power switch after the alarm buzzer stops. Request for fan motor repair after checking the alarm buzzer and the AL-2 lamp ON.

	Fan-Motor: UF25GC23BTH (230V Ball type) Ball=bearing (Fulltech Company) ● As to the alarm buzzer, it will sound when the piping temperature reaches +70°C(± 5°C) on the bimetal thermometer attached to the piping of high pressure (the front piping with the front gallery of a Compressor room detached). 3) Freezer overload : Where a freezer does not work due to a certain reason, a thermal relay of a magnetic switch for freezer operation will run. Check the inside of a Compressor room and a freezer. If there is no anomaly in a freezer, a user can resume operation by pressing the protruding thermal relay switch.
13. The operation sound will change about 1 min after the start of operation.	Movement of the bypass circuit for unblocking. The bypass circuit for unblocking is mounted for the following reason. Hydrocarbon refrigerants melting in freezer oil will boil being exposed to high temperature and high pressure upon the start of operation. The refrigerant melting in oil flies actively and moves into the high-pressure pipe. At this time, oil (high concentration) moves into a high-pressure pipe together and passes a capillary, which may cause blocking/clogging. To prevent this, place a bypass between BC (block condenser) and driver and install SV. Upon the start of operation, SV opens simultaneously and the refrigerant moves to the low pressure and returns to a freezer via SV. By running this move for 30 sec to 1 min, oil will be blended well with refrigerants, which decreases blocking/clogging. The operation sound will change once SV is closed.

Maintenance

Cleaning the freezer

Before cleaning the appliance, you must unplug it and take out all the stored materials. Then, open up the door to defrost the appliance.

- Prepare lukewarm water containing a small amount of neutral detergent. Soak a cloth in the water, wring it out, and clean the door. Remove any remaining water with a dry cloth. Keep the door open until it is completely dry. Do not use any polisher.
- Clean the door gasket with water and dry it regularly. Do not use oil or grease, since the gasket may be damaged or ripped.
- To clean the exterior of the freezer, use any commercially available wax cleaner. However, make sure that the wax does not touch any plastic parts of the appliance.

The condenser and compressor are very hot. Do not touch any part of them, or you may suffer burns.

Make sure that any electrical parts do not come into contact with water. Failure to follow these instructions may lead to electric leakage or breakdown.

Do not use the following substances:

Thinner, benzene, alcohol, petroleum, powder soap, polisher, alkaline-detergent (Including mild ones), hot water, acid, scrubbing brushes, etc.

- The above mentioned substances may damage the paintwork and plastic surfaces of the appliance. Especially, Alkalescent detergents may transform the plastic surfaces. Follow precautions in using a chemical rag. Clean inside the compressor room (in particular, condenser) with a vacuum cleaner at least once a year.

The following things do not indicate breakdown

- You may hear the noise of water flowing.
  This noise comes from the refrigerant circulating around the cooling system. Even when the compressor is not working, there may be a flowing noise.

- The main door may become heavier or impossible to open immediately after being shut.
  The air that entered into the freezer is cooled down rapidly, so the pressure inside it becomes lower than that outside temporarily.
  ■ Do not try to open the door forcibly and wait for some time.

- Condensation appears on the surfaces of the appliance.
  This happens in a condition of high humidity, when the doors are opened and closed frequently, or when the stored materials have high moisture levels. Wipe it off with a dry cloth.

- The front and sides of the appliance are warm or hot.
  The front and sides of the appliance contain built-in hot pipes that radiate heat and reduce condensation on the outer walls. The temperature of stored materials is not affected by the regular functioning of these pipes.

- The alarm goess off after putting in or taking out materials.
  When large quantities of materials are taken out or put in at the same time, and the doors are kept open, the alarm goes off. After a while, the inside temperature will go back to the set point and the alarm will be deactivated. To stop the alarm temporarily, turn off the “ALARM” switch.

Moving and Reinstalling the Freezer

When you need to move the appliance, consult your sales agency or qualified experts. Imperfect reinstallation may cause electroshocks or fire.

When you need to move the appliance, make sure not to tilt it or let it fall over. Failure to follow these instructions may lead to personal injury and/or property damage.

When you need to move the appliance, pull out the power plug from the outlet, taking care not to damage the power cord. Damage to the cord may lead to electric shocks or fire.

Before moving the appliance, remove all stored materials from the freezer.

When you need to move the appliance, do not lay it on its side, since this may became a cause of a breakdown.

Power cut

- Limit door opening as much as possible.
- Do not put any new materials into the freezer. It will make the inside temperature higher.

Turning off the appliance for long periods

- Clean the inside of the freezer and leave the doors open for 2~3 days until the inside is completely dry in order to avoid mold or unpleasant odors.

Repair of scratches on the painted surface

If you leave the damage as it is, rust will occur. Take action immediately. (Simple measures)

- Seal a small damaged area.
- Cover with a waterproof wall paper for a big damage area (remove any rust with sandpaper).

Disposal of the appliance

- Remove the door hinges and the gasket.
- Do not leave the appliance in a place to which children have easy access.
- Contact a qualified scrap merchant for disposal.

Specifications

Name for product	Freeze Ultra Low Temp Chamber(-150°C) double cooling system	
Type	CRYO 170	CRYO 230
Cooling function	-140°C ~ -150°C	
Cooling Approx.	approx. 170L	Approx. 231L
Extern. dimension	W1420xD960xH1090	W1600xD960xH1090
Inner dimension	W500xD500xH685	W680xD500xH685
Exterior	Electronic galvanized sheet(acrylic coating)	
Interior	Stainless steel sheet	
Insulator	Rigid foam polyurethane	
Inner cover	Polystyrene resin 1 sheet	Polystyrene resin 2 sheets
Compressor	1100W x 2	
Cooler	Pipe on sheet	
Condenser	Pin less block condenser	
Refrigerant	Mixture refrigerant (HFC)	
Radiant value		
Power		
Operation current		
Rated power consumption		
Suggested power capacity•	Mixture refrigerant (HFC)	
Power cord plug	Refer to the picture below	
Thermostat	Digital temperature indicating controller	
Temperature alarm Power failure alarm	Buzzer alarm upon Power failure alarm and temperature increase (upon +15°C increase from the set temperature), battery charging type 2.5V (48 hour operation), including an alarm signal output jack (zero voltage A contact)	
Double cooling system anomalies alarm	Lamp (red) light on upon electric anomalies of a cooker	
Fan motor anomalies alarm	Digital temperature indicating controller	
Automatic cooling auxiliary device	Responding to LN2(pressurized cylinder)	
Weight	Approx. 374 kg	Approx. 391 kg
Components, etc	Key - 2 types (2 each), 4 casters, 2 adjusters, access port rear 1 small (Ø20mm)	

1. The cooling function of the above specifications is under the ambient temperature of +30°C without a load.
2. Operation current, power consumption are under the ambient temperature of +30°C lowest temperature, zeroload, stable running condition.
3. This specification is subject to change without prior notice for improvement.

Electric Wiring Diagram

Bz2	DC12V Buzzer
R1-3	Support Relay
TC2OUT	Temperature Controller Output
DRSW	DOOR Switch
Pt2	Temperature Sensor (Pt100Ω)
TC2	Temperature Controller
SV5	Solenoid Valve
SVSW	Solenoid Valve Switch
Th2	Thermostat
PB	Push Button(BAT CHECK)
Bz1	DC12V Buzzer
BzSW	Buzzer Switch(AL-1)
BAT-1	Battery(DC12V)
CHG-1	Battery Charger
Symbol	
If the Auto Back-up System is Installed(LN2)	
R1	Support Relay
RSW	Switch Remote Control
TP	Terminal,Output Signal
Symbol	
Remote	
ThSW1-2	Thermo Switch(50VA)
Tr	Transformer(220V → 100V)
SV1-4	Solenoid Valve
PSW1-2	Pressure Control Switch
RL	Error Lamp(AL2)
T1-3	Freezer Delay Timer
COMP1-2	Compressor(Ø3 220V)
TH1-2	Thermal Relay
F1sb.F2sb	Support Fan Motor
F1-2	Fan Motor
CS	Power Outlet
R1-5	Support Relay
Mg1-2	Magnet Relay
Pt1	Temperature Sensor (Pt100Ω)
TC1	Temperature Controller
PSW	Power Switch
Symbol	
MAIN	

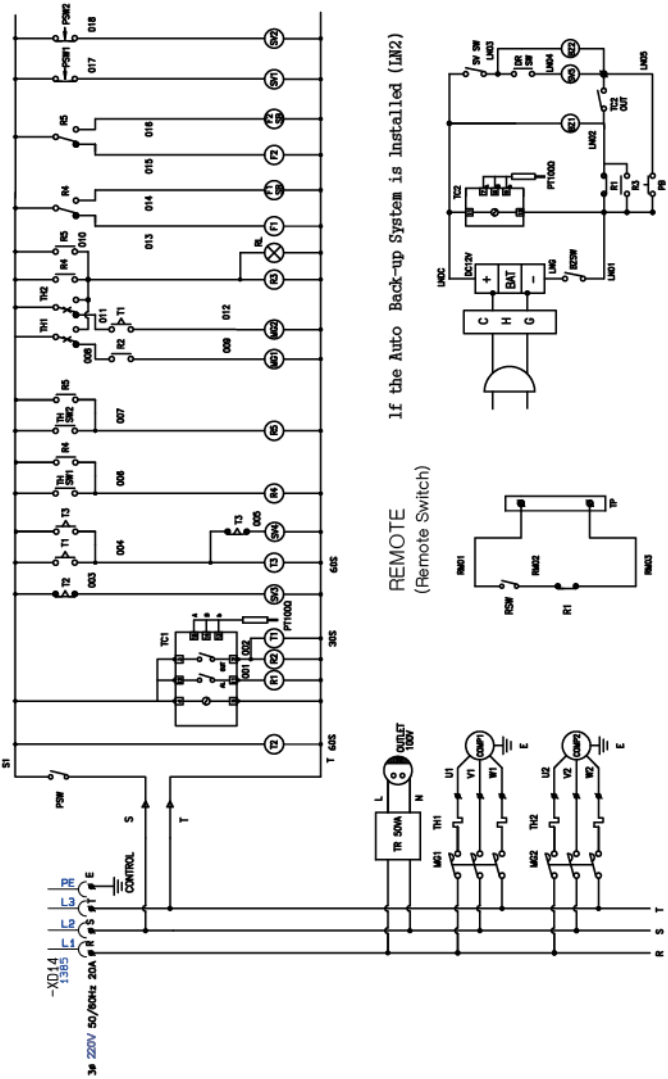

Test data

Pull down data CRYO 170-0 & CRYO 230-0

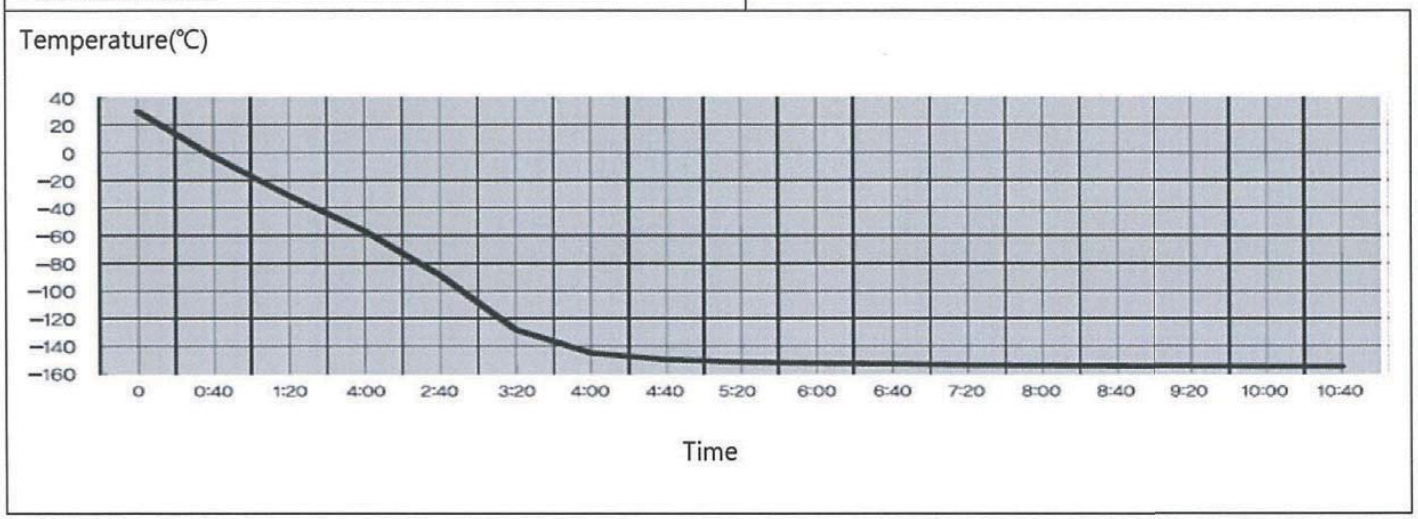

Pull up data CRYO 170-0 & CRYO 230-0

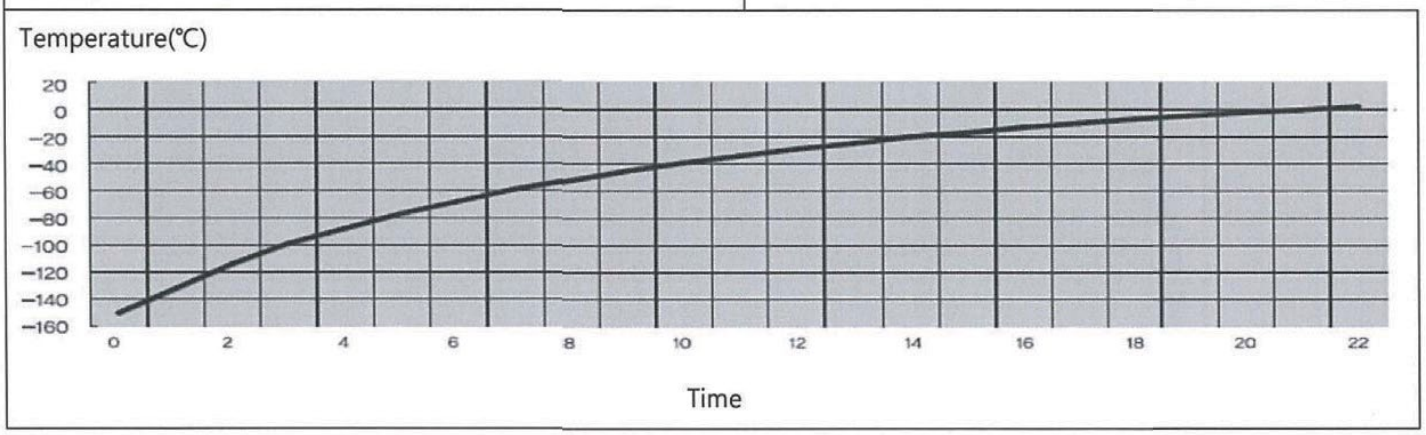

Temperature-pressure data CRYO 170-0 & CRYO 230-0

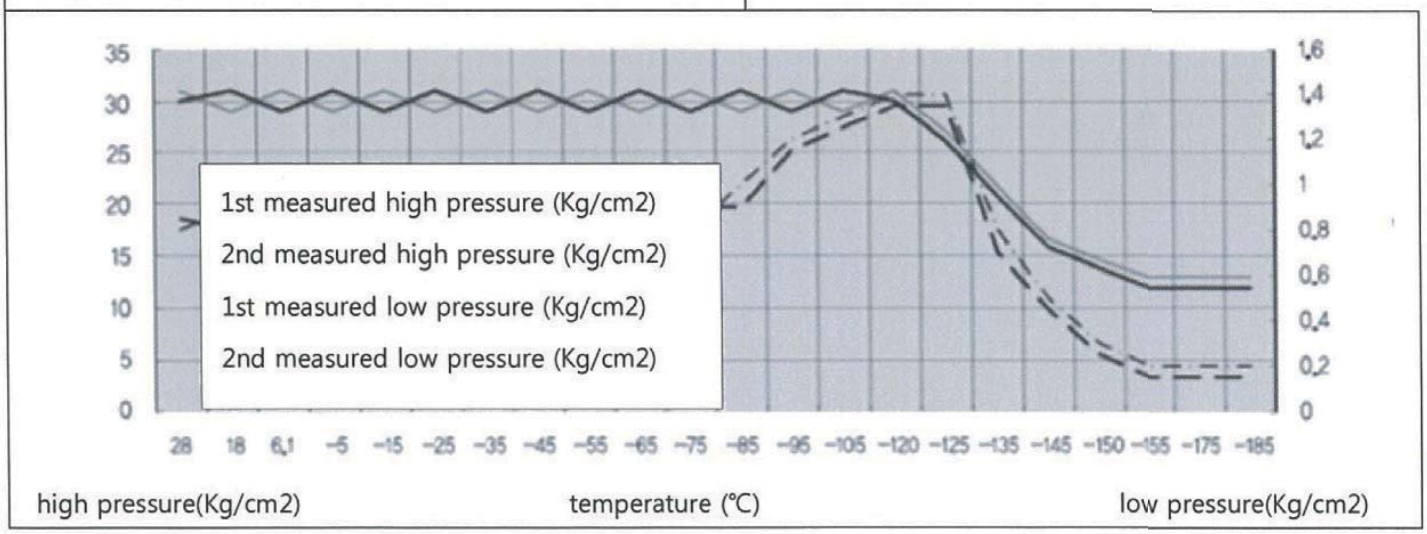

The advantage of the double cooling system

Image of temperature rise when one system is down 【Usual cascade system vs. Double cooling system】

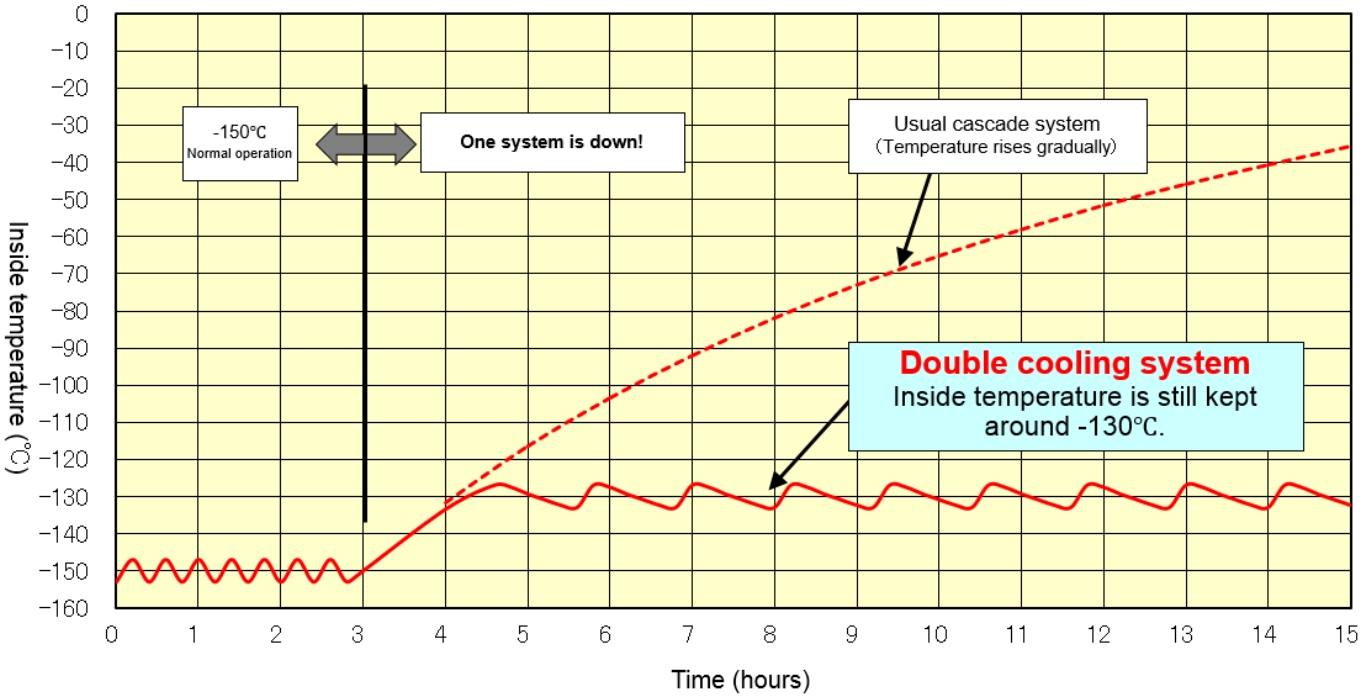

Notes:

ARCTIKO A/S | Oddesundvej 39 | 6715 Esbjerg
Denmark | +45 70 20 03 28 | www.arctiko.com
info@arctiko.com

5080056-06